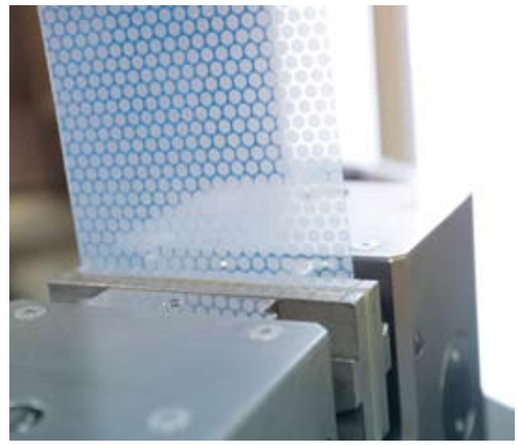

1

Design Aspects of ETFE Foil Cushions

Karsten Moritz, seele

Dr.Ing. Karsten Moritz has been head of the research and development department of seele cover GmbH since 2007. Before this, together with Dieter Linke, he managed the engineering office Engineering + Design GbR in Rosenheim, which carried out the structural dimensioning of the ETFE cushion envelopes of the Allianz Arena and the AWD Arena.

2

R & D laboratory
The installation of tension test stand at the seele cover research and development laboratory represented an important step towards acquiring deeper knowledge about the mechanical material performance of lightweight construction materials. The universal test machine installed, which has a temperature chamber (40 °C to +100 °C) (fig. 2) and allows contact-free measurement of expansion, enables important specific values to be calculated under simulated environmental conditions over a wide area. Ultimately, knowledge of mechanical properties also provides the basis for the compatibility of composite, multiple layer building elements and can help open up new possibilities in terms of building physics.

The architecture of the Allianz Arena is characterised in a particular way by the translucent envelope with its diamond-patterned surface structure that can glow in different colours. It is this envelope alone that makes the building unique. It consists of a foil made of the high performance plastic ETFE. A building envelope of this form could not have been made using any other material.

Development of the ETFE foil cushions

ETFE or, more accurately, E/TFE is the chemical abbreviation for the thermo-plastically workable material Ethylene/Tetrafluorethylene Copolymer. The film or foil produced from it was first brought onto the market in 1970 by DuPont, under the trade name Tefzel. After polymerization the powdery ETFE is made into a granulate and then extruded as a foil. After use ETFE foil can be returned almost completely to the cycle of materials. In the building industry it was initially used to roof greenhouses on account of its high light and UV transmission properties. At the beginning of the 1980s the first permanent large ETFE roof elements for botanical gardens were built, followed later by roofs for swimming pools, atria etc.
The number of competent specialist firms working in this area is limited, the number of suitable foil producers equally so. The firm Covertex from Obing am Chiemsee, today known as seele cover, which specializes in the area of membrane and foil construction, carried out the ETFE envelope of the Allianz Arena and the transparent foil roof of the AWD Area in Hannover. In both these projects Fluon ETFE Film produced by Asahi was used. Covertex commissioned the engineering office Engineering + Design, Linke und Moritz GbR, Rosenheim to carry out the structural dimensioning of both foil systems.

Construction method

These stadia illustrate two fundamentally different approaches to building with membranes. The foil envelope of the Allianz Arena in Munich consists of air-supported cushions made up of several layers. The transparent roof over the stands in the AWD Arena Hannover demonstrates the principle of the single layer, mechanically pre-stressed membrane.

In terms of both appearance and structural performance there are clear differences between these methods: the cushions formed out of at least two layers are pre-stressed by overpressure of the enclosed air volume and stabilized. This creates a synclastic surface over wide areas – i.e. curved in the same direction in the two main directions of curvature. It is only at the corners that local anticlastic areas – i.e. curved in opposite directions – occur, much like with a cushion. In contrast mechanically pre-stressed membranes are anticlastic surfaces. By inserting them tightly in a fixed surround they are pre-stressed mechanically rather than pneumatically. The areas of foil of the AWD Arena Hannover, which are almost level, are a borderline example of the anticlastic building method due to their lack of curvature. Cushions, in contrast to mechanically pre-stressed membranes, have adjustable pre-tension, thanks to the internal pressure. To create the internal pressure there is a blower room (station) in each corner of the Allianz Arena with three blower boxes (units) to two blowers (fans). Each unit supplies one quarter of the facade or one eighth of the roof cushions by means of a branching system of air pipes with a nominal internal pressure of 300 Pa (roof) to 450 Pa (facade). When snow loads occur the pressure is increased to 800 Pa. The two fans in a unit alternate automatically with each on a weekly basis. The capacity of each fan is designed for the air requirement of one quarter of the stadium, so that if one unit fails the support pressure can be maintained by the supply pipes. If there is a power failure an emergency power supply keeps the system in operation. Important elements of the air supply are thus redundantly designed. The envelope of the Allianz Area measures around 66,500 m^2 and is made up of 2784 diamond-shaped areas or bays, 2760 of these bays are filled with double layer ETFE foil cushions (secondary system membrane). The diamond-shaped cushions, which vary in size up to 4.6 × 17 metres, produce a maximum bay size of about 40 m^2 and an enclosed cushion volume of up to around 25 m^3.
If the spatially curved cushions were flattened out this would produce a total foil surface of around 147,000 m^2. By changing the internal pressure the loads resulting from dead weight, wind and snow

3

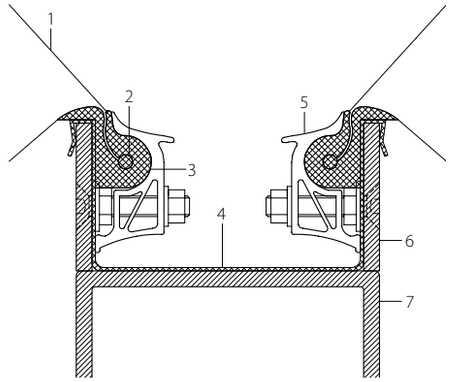

4

are directed from the foil into the substructure (steel secondary system). This is what gives the cushion envelope its unique diamond-pattern structure. It consists of 96 spiral and 29 ring-shaped steel beams that direct the roof loads, generally by means of hinged posts, into the main structure (steel primary system).

Drainage of the cushions

An innovative design development was introduced in the Allianz Arena project in the form of a self-acting cushion drainage system. It is to be found in 1900 cushions in the flat area of the roof. When an unscheduled loss of air pressure occurs at the same time as rainfall, this drainage system automatically directs the water out of the cushions, thus preventing larger amounts of water gathering. As both the power supply and the blowers for the cushions are essentially redundantly designed, the likelihood of such a case occurring is slight, but nevertheless forms an important aspect of the safety concept (figs. 6 and 7, p. 50).

Expansion joints

The expansion joints in the substructure of the cushion envelope represent a second construction innovation. It was due solely to this innovation that areas of the steel substructure for the cushion envelope in the Allianz Arena could be made continuous. Otherwise the opening and closing of the expansion joints caused by variations in temperature could have possibly destroyed the thin foil of the cushion in the long term. This innovation consists of a spring steel plate at each expansion joint in the obtuse corners of the diamond which translates the change in the width of the joint into a change in the span of the cushion, so that the thin foil is not damaged. This solution called for a further innovation, namely a holding fixture made of the elastomer EPDM which, thanks to its flexibility, can easily cope with the change of radius of the spring steel plate. This development, too, was used for the first time in the Allianz Arena (Figs. 3 – 5).

5

Approval of individual cases

A general building regulation approval that could be interpreted as allowing the use of ETFE foil as envisaged in the Allianz Arena did not exist. The system consisting of foils, connections of edges and part areas could not be classified in terms of standardized building products or types of building. This meant that its suitability had to proven on an individual basis through the building regulations approval procedure. The supreme building authority in Munich specified requirements based in principle on the Bavarian building regulations in relation to this project and gave its approval, on the basis of the expert reports, calculations and material tests submitted. The focus of this procedure was on fire protection and structural safety.

Fire protection

According to test certificates the ETFE foil used is a B1 building material with low flammability (DIN 41021). With direct flame impingement it begins to melt at a temperature of around 275 °C, which allows gas and heat to be extracted via the source of fire. The melted material quickly solidifies so that the foil is classified as "does not fall (drip) when burning" according to DIN 4102. Due to the low weight per unit area its fire load is extremely small. As the ETFE envelope of the Allianz Arena forms both the roof and the outer layer of the double facade for the eight-storey solid structure the requirements imposed by the fire protection plan agreed with the relevant authorities were relatively stringent. Fire tests on roof and facade

1 Mono-axial tension test
2 Universal test machine with temperature chamber
3 Obtuse corners of diamond: edge section with spring steel plate to take up temperature expansion from the secondary structure
4 Cross-section through gutter and edge section
5 Junction of members in the facade

R Gutter section facade scale 1:5
1 ETFE cushion air-filled (membrane thickness 0.15 – 0.25 mm)
2 EPDM weather strip ∅ 6 mm
3 EPDM seal strip, fitted in works
4 Sealing of gutter thermoplastic polyolefin
5 Aluminium fixing section, anodised
6 Steel bar 60/5 mm, in obtuse angle corners spring steel plate to take up movement at junction
7 Secondary structure Rectangular section tube 120/220 mm

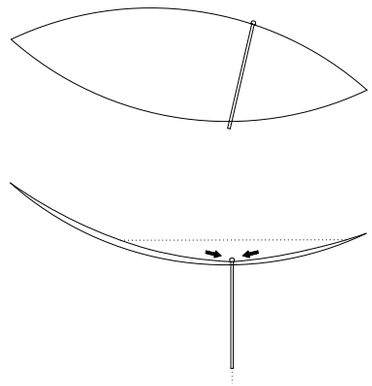

6a

6b

7

Water loads
When the system is operating normally the curvature of the cushions ensures that meltwater and rainwater flow into the channels in the members and from there into the three main circumferential drainage gutters. With horizontal cushions the possibility of water pockets forming during a breakdown of the system is also examined in principle. In comparison to textiles, foils have a considerably lower breaking strength so that they frequently represent the "predetermined breaking point" of the entire system. Due to the extreme softness of foil material in the plastic area – the breaking elongation can, depending on the state of stress, amount to several hundred per cent – water loads could accumulate in a hollow that had once formed, without the water flowing over the edge. It is therefore difficult to calculate a mathematical maximum load that could be used as a basis for proving the tension performance of the foil. To exclude the possibility of water collecting in the flat area of the Allianz Arena roof during a breakdown in the operating system, 1900 cushion elements are equipped with a self-activating cushion drainage system: water can flow out of the hollow through a pipe that is fixed to the upper foil and runs through a sealing ring in the lower layer (figs. 6, 7). The cushion drainage system is used only where, despite the built-in redundancy, the air supply system fails and, at the same time, heavy, or long-lasting, precipitation occurs. As the sinking of the internal cushion pressure below a set minimum value sets off an automatic alarm in the services control centre, loss of pressure can quickly be recognized and corrected, so that the cushion drainage system is rarely used.

elements carried out at the MFPA in Leipzig showed fire performance suitable for this use (fig. 8).

Structural security
Up to recently very few accepted technical regulations in the form of special guidelines, dimensioning or test standards existed for membranes made of textiles or foils. Therefore a verification plan (effects, material qualities, mathematical model, safety etc.) was agreed upon at an early stage with the inspecting engineer, Professor Albrecht from Munich

Unloaded weight
The minimal thickness of the foils results in a low unloaded weight which as a rule can be neglected in calculations With a specific weight 1.75 kN/m^3 the two layers of foil in a cushion (2× 250 µm) result in a mass per unit area of less than 1.0 kg/m^2. In comparison 4-mm thick glazing has a mass per unit area of around 10 kg/m^2, and 25-mm-thick twin wall polycarbonate panel around 3.5 kg/m^2. This means a weight saving for the cushion of about 90 % compared with the glass pane and about 70 % compared with the twin wall panel – in just the covering alone. If one takes into account the spans of 4 to 5 metres that can be achieved with cushions (according to load, without cable support) this reveals a further potential saving in the substructure (note: on account of pre-stressing and external effects with membrane constructions, unlike in rigid coverings, loads also occur in the membrane plane that reduce these savings).
As the unloaded weights of the covering and substructure are directed, together with the external loads from wind pressure and snow, to the foundations, the cross-sections and unloaded weights of the entire load-bearing construction are reduced.

8

Pre-stressing
The pre-stressing of the foil caused by the internal pressure in the cushions serves primarily to stabilise the cushions against wind. It prevents knocking of the foils during gusts of wind and reduces their deformation. The extent of the pre-stressing is dependent on the curvature and the internal pressure of the cushion. In the Allianz Arena the nominal internal pressure of 300 Pa results in an average pre-stressing of the foil of around 1.0 kN/m.

Wind loads
Wind tunnel tests on models of the stadium in built and fitted-out state as well as wind reports based on these from the office of Wacker Ingenieure, Birkenfeld provided the wind loads for dimensioning the cushion envelope (fig. 11, p. 52). These were overlaid with the other adverse loads

Overlaying wind loads and internal cushion pressure
The wind load on a cushion results from the difference between the air pressure occurring above and below it. Each of the foil layers is stressed by the pressure difference between the adjoining air pressure and the internal pressure in the cushion in response to the wind load.
When wind suction occurs on the upper face the air pressure above the cushion – i.e. the supporting force of the air – is reduced. Consequently, the upper foil deforms upwards and is stretched. Its rise (maximum height) increases – in relation to its pre-stressed state with nominal internal pressure (fig. 9). Since the fan is not capable of supplying a larger volume of air through the small cross section of the air ducts (ca. 20 cm^2) when brief gusts occur, the number of air molecules enclosed in the cush-

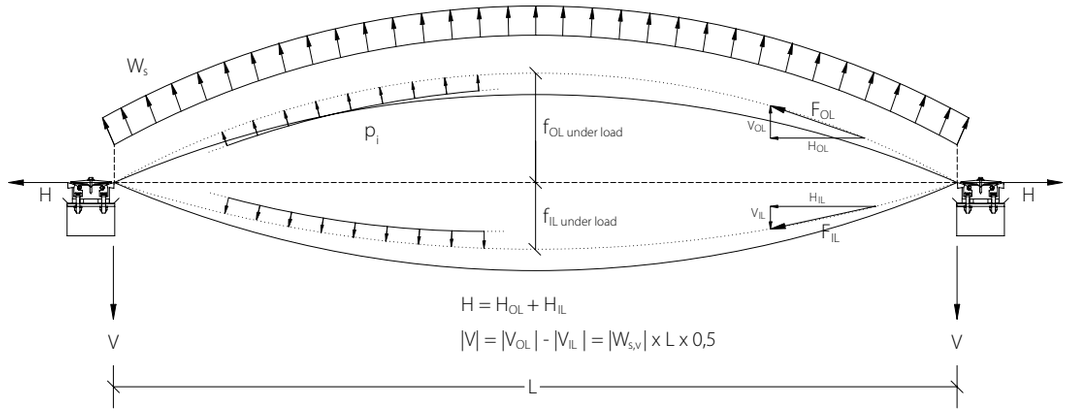

9

ion remains almost constant. Assuming a constant temperature during the gust, the enclosed air relaxes according to Boyle's gas law (p × v = constant), i.e. the volume of the cushion increases and internal pressure decreases. Thus the lower foil is relieved and its height reduces. If the wind suction loads on the upper face are so high that the lower foil is relaxed completely, the internal cushion pressure matches the air pressure below the cushion. In this case the internal cushion pressure should not be overlaid with the wind suction. When wind pressure is on the upper face the system behaves according to the same law: the enclosed volume of air is compressed, the pressure in the cushion rises – in relation to the nominal internal pressure – and the lower foil is stretched and its strain increases. This is the load transfer principle of the cushion. To calculate the internal cushion pressure under wind loads, a calculation method was developed by Engineering + Design that takes into account both the gas law and the pre-stressing stored in the foil.

6 The function of cushion drainage
  a Cushion with regular internal pressure
  b Breakdown of operating system, the collected water is emptied through the drainage pipe
7 Drainage pipe
8 Fire test
9 Cushion section on steel, double layer, deformation and reactions at bearings under wind suction
10 Fitting the ETFE foil cushions in place

10

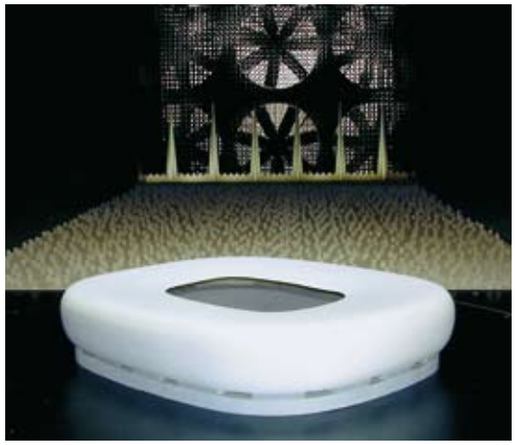

11

11 Model in the wind tunnel

Snow loads
Between 1952 and 2003 the German Weather Service measured the water equivalent of the snow cover on the ground at the location Munich-North three times weekly. Experience has shown that the amounts measured on the ground are greater than those on an elevated roof surface exposed to the wind. With the agreement of those involved in the project, the authorities and the inspecting engineer, the assumed snow loads were based on these measurements. In winter 2004/2005 there were heavy snow loads on the almost completed roof. It turned out that the snow is distributed unevenly, but favourably, on the cushions. It tends to be blown completely off the rounded top of the cushions and into part of the gutter. Contrary to what had been envisaged it was not necessary to increase the internal cushion pressure, as the major part of the load was led directly into the gutters. For dimensioning purposes, the snow and wind load assumptions were overlaid in accordance with the dimensioning concept.

Dimensioning
The vertical symmetry plane in the centre of the stadium creates 1392 different spatial geometries. Combined with the different load situations this means that each foil is differently stressed. In the circumferential direction, i.e. around the perimeter of the stadium, these differences are considerably less that across the section of the stadium, i.e. from eaves to the inner edge of the roof. Therefore it was possible to calculate the dimensions for the most heavily stressed cushion of a ring, without this resulting in serious economic losses. The foil thickness was increased in increments of 50 µm in accordance with the stress of each of the 29 cushions examined. The thickness of the outer foil varies between 200 and 250 µm, that of the inner foil between 150 and 250 µm. It was possible to influence the resulting membrane forces within certain boundaries by modifying the maximum height of the cushions. These limits were determined by the required appearance and the wish to avoid collisions with the steel building. The dimensioning of the foil was carried out on the basis of known material values. Long-term testing under simulated weather conditions (influence of water and xenon arc radiation in accordance with DIN 53387) helped assess long-term performance. The structural stability of the cushions does not depend solely on the structural performance of the foil itself. The connections of different areas of foil and the edge connections must also be able to transfer the foil forces.

Connecting areas of foil
The broad slit extrusion production process at present allows a maximum foil width of 1.60 metres (Fluon ETFE Film). Therefore to produce the spatially curved surfaces the lengths of foil delivered in rolls to the works had to be welded together in accordance with the cutting pattern. The thermally produced welded connection in the form of a flat seam is about 10 mm wide and approximately as thick as the sum of the layers welded together. In contrast to textiles in which, normally speaking, only the coating but not the fabric is welded, with welded seams in foil a homogeneous connection of the two cross-sections that transfer the load is created. In the Allianz Arena project adequate load capacity of the welded seams was guaranteed by the self-monitoring and quality control exercised by the company responsible for the work. In addition, external monitoring of the manufacturing process was performed by Labor Blum, Stuttgart, a testing, monitoring and certification centre approved for membranes by the Deutsches Institut für Bautechnik (DIBt).

Development of Lightweight Building Shells

Karsten Moritz, seele

The Allianz Arena in Fröttmaning near Munich was completed in 2005. Does it represent a milestone in the history of buildings in general and stadium buildings in particular – like the Olympiastadion in Munich for example – or is the construction method of the cushion envelope merely an architectural episode that follows a short-lived trend? How should this building envelope be evaluated in an architectural context? These questions offer plenty of material for discussion. One way of judging the quality of a building or part of a building is to view it in the architectural context, i.e. against the background of its specific purpose and function. Useful criteria in making such an evaluation include quality along with the well-considered and harmonious integration of the following individual aspects (fig. 13, p. 54):

- Form
- Function
- Construction
- Ecology
- Economy

These aspects overlap and are related to and affect each other. Their qualitative assessment is by no means constant but – like the design of buildings itself – is subject to cultural and social influences. The reasons for this could be, for example: cultural developments and an altered sense of tradition, change of values, increasing demands and an improved standard of life, trends and changes in taste, inventions, developments and the associated state of science and technology but also changes in laws, standards and guidelines.

Ecology

However fundamental and powerful Louis Sullivan's (1896) principle that "form follows function" [1] may be, it can be applied to building today only to a very limited extent. We are standing at a social turning point, at which ecology as a criterion will become the determining factor in our work. The challenge for architects and engineers today lies in achieving harmony between form, function, construction and economy, under ecological premises.

The criterion of ecology is occasionally viewed as an irritating restriction to design freedom. However the opposite is true. The "ecological" approach proves to be a source of and a challenge for creative work. Commitment to ecology should not merely take the form of lip service, it must become part of our thinking and action. We must learn to see this criterion as a characteristic that determines the design and quality of architecture.

Ecology and economy are mutually dependent

The criterion "ecology" includes a wealth of aspects e.g. long life-span, environmental compatibility, esource conservation, saving of energy, CO_2 emissions, environmental performance assessment and recyclability. It is nowadays generally agreed that neglecting these ecological aspects inevitably has economic consequences which we will have to answer for and bear the cost of, perhaps not always immediately and directly, but certainly in the long-term and indirectly. Consequently, ecology and economy are not antitheses but are directly related to each other. The more our supply of non-renewable resources dwindles, the more cost-effective ecological products and actions become. Today already the ability to design, plan and build in an ecologically aware manner offers a decisive competitive edge. Franz Alt writes: "Never before has it been so easy to do what is ecologically reasonable." [5] This development leads to Brian Cody's hypothesis: "form follows energy". [6] This principle can be interpreted in a number of ways, if one thinks for example of the energy efficiency of a building, its

12

Dr.Ing. Karsten Moritz has been head of the research and development department of seele cover GmbH since 2007. Before this, together with Dieter Linke, he managed the engineering office Engineering + Design GbR in Rosenheim, which carried out the structural dimensioning of the ETFE cushion envelopes of the Allianz Arena and the AWD Arena.

12 Insulated and translucent membrane envelope (carried out by Covertex GmbH) in the course of the refurbishment and renovation of the Olympia indoor swimming pool, Munich

Olympiahalle Munich

In 2007 the membrane roof of the Olympia indoor swimming pool in Munich was renovated with particular emphasis placed on building physics. The roof consists of four layers of different translucent or transparent materials, which, combined, provide a thermally insulated translucent external envelope. The layers are built up as follows (from inside) [2]:

- supporting membrane made of translucent, PVC-coated polyester textile
- 70 mm translucent and impregnated polyester fleece insulation with active ventilation system that reacts adaptively to attack by water by means of moisture sensor (as a result vapour barrier can be omitted)
- Sealing made of transparent ETFE foil
- Back-ventilated acrylic glass elements on cable net

This project documents the complexity of constructing double curved surfaces with built up layers of this kind. However it also shows the enormous potential that lies in the intelligent use of lightweight construction methods and in the combination of different membrane materials.

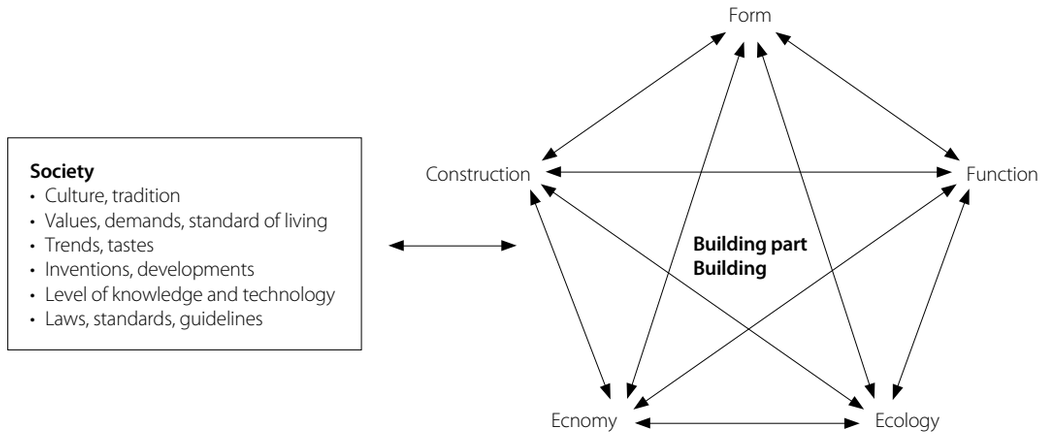

13

AWD Arena Hannover
The AWD Arena Hannover was built at around the same time as the Allianz Arena. In this project an area of around 10,000 m² was roofed with almost level, single-layer, mechanically pre-stressed ETFE foil panels. This building represents a combination of a slender primary structure, which minimizes the use of building parts exposed to deflection forces and connects flying masts to form a ring, and a secondary structure subject to tensile forces with cable-supported ETFE foil panels. This led to a very efficient lightweight construction and a load-bearing system used here for the first time. The AWD Arena Hannover was awarded the IngenieurbauPreis 2006. The jury was particularly impressed by " ... the fact that here, despite the size of the building, a technically aesthetically, economically and ecologically balanced solution was found." [3, 4]

(ecological) impact, of the flow of forces in a building or of the energy used in production, operation, recycling/downcycling and disposal i.e. on the entire cycle of materials in a construction. Certain qualities are not always obvious from the building's form alone. For example, without further information an outsider can rarely recognise a building's environmental footprint.

Manifesto »Vernunft für die Welt« (Reason for the World)
Awareness of the consequences of neglecting or ignoring ecology also forms the basis for the manifesto "Vernunft für die Welt" [7] formulated in March 2009. German architects, engineers and town planners here made a plea for a different, future-oriented kind of architecture and engineering. The authors and signatories of this document commit themselves to a way of designing and building that is both climate and environmentally friendly and therefore the manifesto represents a recognition of the particular responsibilities borne by those who make buildings. Sustainable architecture and engineering can and should form a decisive element in the urgently needed change to the way we use resources. The goal must remain unaltered: to achieve traditional architectural values, a high level of quality as well as harmony of form, function, design and economy – but using current technical possibilities and an understanding of environmental relationships and taking into account long-term consequences. Thus designing and building today has been enriched by an important criterion, and, as a consequence, more complex.

14

Lightweight building
Lightweight constructions offer ecological advantages and, where used sensibly and in the context of professional planning, they contribute to resource conservation. A lightweight plate or shell structure such as a membrane construction often weighs only 1/100th of a massive structure that could be used as an alternative. This advantage in terms of weight can be entered in the ecological balance sheet at various points, for example in production, transport, assembly, dismounting and disposal. Other factors include the use of non-renewable energy in production, which is an aspect of every material and every construction method, the consumption of energy, energy gain during use, life span, the possibility of recycling or the expenditure involved in separating different materials for disposal, in particular with composite materials. Assessing a construction method solely in terms of its mass would therefore be one-sided. Despite this, thanks to their low weight alone, lightweight constructions do have an advantage when drawing up an energy balance sheet.

Function
Lightweight building constructions are principally used as load-bearing structures, i.e. to carry external loads (e.g. wind and snow). Extremely strong but light weight materials are ideal. Lightweight plate and shell structures subject to tensile forces are generally made of textile membranes or foils. [8] In addition to carrying a load, such structures must increasingly meet the demands imposed by fire protection as well as building physics and internal climate. Since light shell structures alone are not suitable for such applications due to their thinness, composite or multiple layer systems are often employed. In this context the umistakeable trend is towards light and efficient structures with multi-functional qualities. Consequently this area is an important focus of research and development at universities and in industry. The relationship

15

between lightweight building and resource conservation is also expressed in expanding public interest and increasing importance in teaching, as well as in the growing number of such structures being built. The relationship between form and the flow of forces, which can generally be understood by experts and laypersons alike, as well as the often extremely high degree of translucency or transparency, have certainly contributed to this development.

Types
Werner Sobek identifies three kinds of lightweight construction: [9]
- Material lightweight building
- Structural lightweight building
- System lightweight building

Accordingly lightness is achieved by:
- Light building materials (material lightweight building), which in the case of a load-bearing building element are high-strength in order to carry loads over large areas and without columns.
- Structures that are particularly slender, with cross-sections that are adapted to the material, the construction method and the loading, (structural lightweight building) whether it be through avoiding bending loads and favouring tensile rather than compressive stress; through the short-circuiting of forces (e.g. tension and compression ring in a spoked wheel); or by employing load-bearing elements which are oriented towards the force path of the loading that determines the shape or have a density distribution that matches their stress distribution (as with a skeletal structure).
- The use or combination of systems that can reduce construction elements or building parts (lightweight system building), for example controllable systems that can change to fulfil several functions (multi-functional elements) or that can adopt different states (e.g. phase change materials, electrochrome/photochrome or electrotrope/phototrope surfaces), or even elements that adapt to the demands made on them (adaptive systems).

All three kinds of lightweight buildings aim to meet the demands made on a building or building part with minimal employment of our resources. This minimalistic approach applies to the entire material cycle, i.e. from the production of raw materials, their utilisation and the disposal of all building parts. Consequently, the goal of lightweight building is to reduce the use of resources in terms of the nature and function of the building, and not solely to reduce the weight of the building.

Potential of foil cushions – the example of the Allianz Arena in Munich
With its envelope of ETFE foil cushions the Allianz Arena qualifies as a material lightweight building. Air-filled cushions form a remarkably light construction in terms of both unloaded weight and structural weight of the primary load-bearing structure. First of all the primary structure only has to direct the low unloaded weight of the cushions, that is of the secondary structure, into the foundations. And secondly in comparison to that of other materials (for example glass) the span of these cushions is relatively large, which increases the intervals between the beams and columns of the primary structure and thus also reduces its structural weight. In the Allianz Arena the maximum dimensions of the ETFE cushions is no less than 4.5 × 17 m measured along both axes of the diamond shapes. The foil cushions also meet the criterion for a structural lightweight building, as they are subject solely to tensile forces. In this construction bending or compressive forces are negligible, as the extremely thin foils avoid this stress by deforming. As tensile stress represents the ideal kind of stress for achieving minimal cross-sections, the cushions result in a minimal construction mass, positioned exactly where the tensile forces can ideally be transferred, i.e. in the outer boundary surfaces of the volume they enclose. Between the foil there is nothing but air that transfers external loads through compressing to the respective load-bearing foil. In the case of wind suction this is the outer foil, with wind pressure and snow the inner foil of the double layer cushion. From a structural point of view a lighter and more efficient system is scarcely imaginable.

13 Important aspects in evaluating a building element or building
14 AWD Arena Hannover, carried out by Covertex GmbH (2005)
15 Indoor swimming pool in Neydens, carried out by seele cover GmbH (2009)

Indoor swimming pool and climbing facility Neydens
The envelopes for the swimming pool and climbing facility building in Neydens consist of triple-layer ETFE foil cushions. Analogous to the German system of approval of individual cases, for the foil cushion construction system, which does not fall within normal categories, the French procedure Appréciation Technique d'Expérimentation (ATEx) was used here. The construction firm carried out comprehensive mechanical and physical tests on a 1:1 mock-up of a section of the climbing hall shell. The irregular geometries of the two buildings demonstrate that complex free-form areas are also possible with ETFE foil cushions. Each bay, each edge and each cushion has its own geometry.

16

16 Climbing hall in Neydens (2009)
17 Allianz Arena, Munich (2005), architects: Herzog & de Meuron
18 Opening onto the landscaped park; Olympiastadion Munich (1972), architects: Behnisch und Partner

Furthermore the cushions meet the requirements of system lightweight building, for instance through the fact that the internal pressure of a cushion adapts to the size of the external load. The inherent ability of ETFE foils to accomodate different loads creates an adaptive system. The TTV (time temperature shift) that occurs in visco-elastic thermoplastics ensures that rapid wind loads (gusts) during high summer temperatures encounter similar material strength and stiffness to slowly occurring snow loads at low temperatures. [10] Finally, cushions made of ETFE foil used to form a transparent shell allow different daylight effects in interiors as well as permitting the illumination of facades (e.g. printing, coating, colour-coating, integrated louvers or blinds, pneumatic regulation of light with alternate printing of middle and outer layer). As a result there is often no need for window elements or blind systems. Thus ETFE foil cushions realize the dream of "the transparent structure" with regulated entry of light, and thus represent a further form of lightweight system building. The potential and variety of uses of different membrane construction methods [11] and of building with polymer materials has certainly not yet been exhausted, one thinks here of combinations with flexible photovoltaic elements to harvest energy over large areas or with aerogel to form light, thermally insulated and yet translucent building envelopes. Further potential lies in the use of foils or films that absorb or reflect certain spectral components (IRcut, UVcut, low emissivity (lowE) films) and thus meet special building physics requirements. Adaptive and switchable films have already been produced as small samples, so that it is only a matter of time before electro- or photochromic or electro- or phototropic films become reality.

Summary

The example of foil cushions allows us to conclude that lightweight shell structures, in addition to transferring load, can harvest energy, provide daylight, illumination, projection surfaces or control the indoor climate. Structural engineers tend to be unfamiliar with this aspect as many of these functions fall within the brief of others involved in the building project. Therefore structural engineers will increasingly have to abandon a view of the structure as a frame that stabilizes the building. Through new materials, production methods, jointing and connecting techniques and planning tools modular, homogeneous or heterogeneous, single or multiple layer plate and shell structures can now meet the demands of building physics and room climate, making them the central building element of complex external envelopes. The Allianz Arena demonstrates the enormous potential of foil envelopes particularly clearly. [12] However, this building only marks the start of a development that views transparent shell structures as modular and multi-functional envelopes. In the Allianz Arena the high quality and the harmony of form and function stand out in particular and have resulted in a building that has attracted much attention. Yet the primary structure concealed behind the cushion envelope does not seem unmistakably to belong to this envelope, in contrast to the structure and skin of the Olympiastadion in Munich. In the latter building form, function, structure and landscape unite to form an overall sculpture, which in the framework of this particular building commission, could not be more harmonious. This explains the Olympiastadion's status as a milestone in the history of architecture. But in comparison to the Munich Olympic building the shell of the Allianz Arena consisting of primary load-bearing structure (steel structure) and the secondary structure (ETFE foil cushions) had to be suitable for the seven-to-eight storey building complex (which meets the criteria for a high-rise building) and for the widely cantilevered roof to the stands. This made it a very different commission to the Olympiastadion in terms of function and planning, which is why the two buildings can hardly be compared. Like almost no other building the Allianz Arena, described as a "witches' cauldron", embodies a football temple for a fan community in an event-oriented society at the start of the 21st century. In contrast the Olympiastadion, more than 30 years older, symbolizes a natural, transparent and open democracy in harmony with nature.

17

Sources

[1] Sullivan, L. H.: The tall office building artistically considered. In: Lippincott's Magazine, Nr. 03/1896

[2] Göppert, K. u.a.: Erneuerung der abgehängten Decke in der Olympiaschwimmhalle München. In: Detail, Nr. 05/2008

[3] Moritz, K.: Bauweisen der ETFE-Foliensysteme. In: Stahlbau, Nr. 05/2007

[4] Verlag Ernst & Sohn: Ingenieurbau-Preis, PresseInformation. Berlin 2006

[5] Alt, F.: Die Botschaft des Jahrhunderts: Die Sonne schickt uns keine Rechnung. In: Detail Green, Nr. 01/2009

[6] Cody, B.: Form follows energy. Lecture at the Institut für Gebäude und Energie IGE. Technische Universität Graz 2007

[7] Vernunft für die Welt – Manifest der Architekten, Ingenieure und Stadtplaner für eine zukunftsfähige Architektur und Ingenieurbaukunst. Berlin 2009

[8] Moritz, K., Schiemann, S.: Structural Design Concepts, Manuskript, Masterstudy Membrane Structures. FH Anhalt, Dessau 2009

[9] Sobek, W.: Bauen für das 21. Jahrhundert. Basel 2001

[10] Moritz, K.: TimeTemperature Shift (TTS) of ETFE foils, Conference Structural Membranes. Stuttgart 2009

[11] Moritz, K.: Bauweisen der ETFE-Foliensysteme. In: Stahlbau, Nr. 05/2007

[12] Moritz, K.: Die Stadionhülle der Allianz Arena. In: Detail, Nr. 09/2005

18